Teileliste		
Element	Anz.	Bauteilnummer
1	1	Standardtisch Beine
2	1	Tischplatte
3	5	Schublade

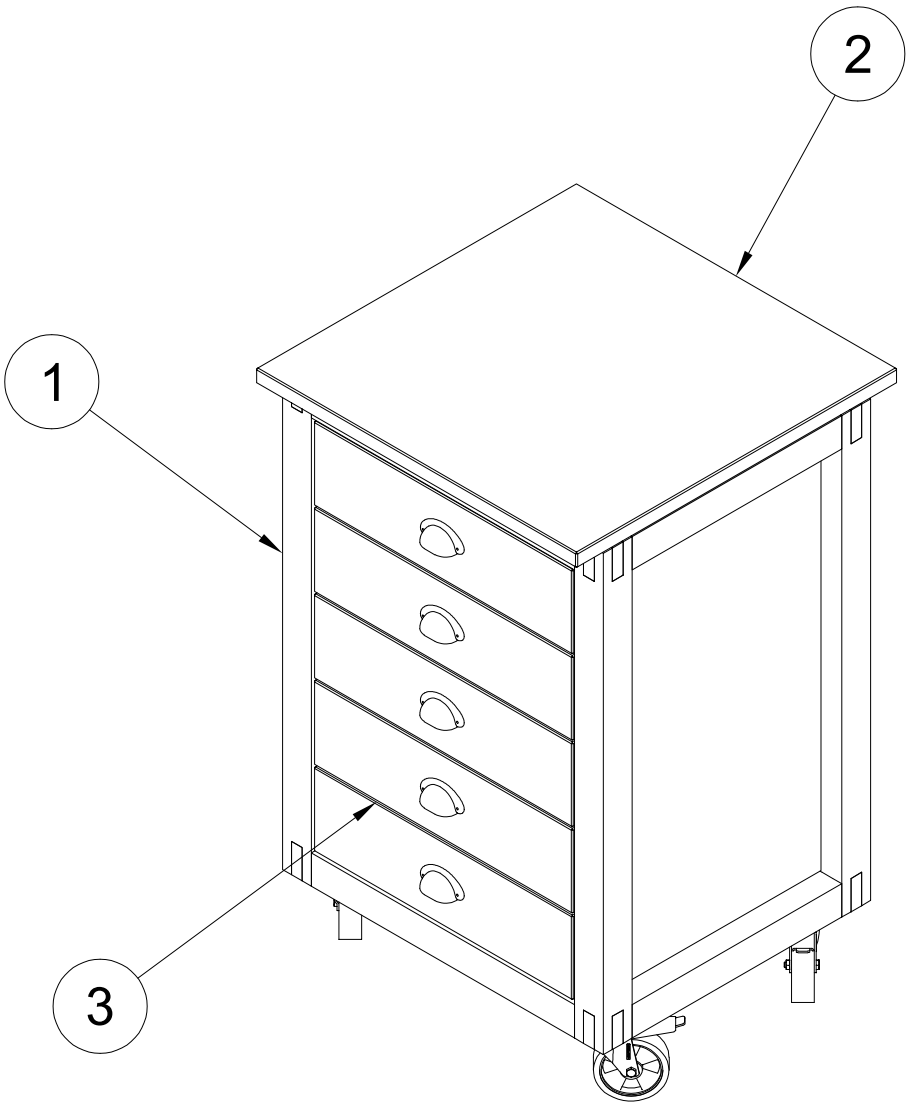

Dept.	Technical reference	Created by Knut Welzel 17.01.2024	Approved by		
		Document type	Document status		
		Title Standardtisch	DWG No.		
			Rev.	Date of issue	Sheet 1

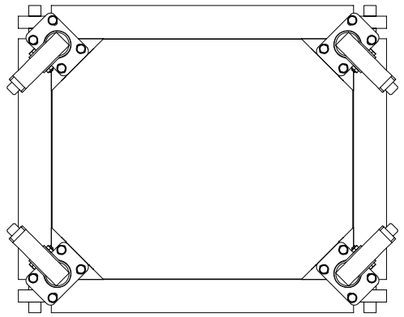

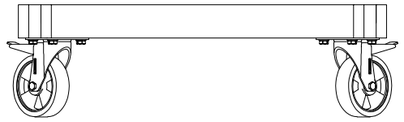

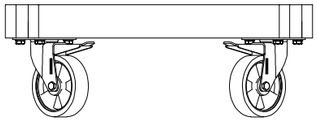

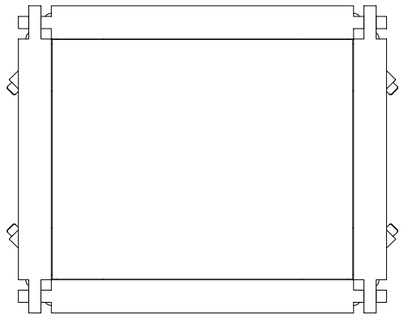

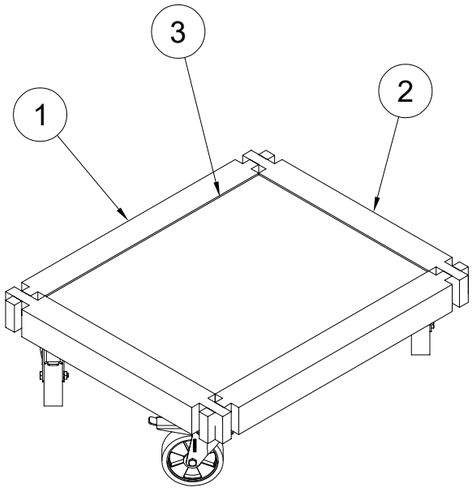

Teileliste

Element	Anz.	Bauteilnummer	Material
1	2	Rahmen vorn unten	Kiefer
2	2	Rahmen seite unten	Kiefer
3	1	Bodenplatte	Kiefer
4	1	Ecke unten	Kiefer
5	2	Spax 5x60 0191010500603	Stahl
6	1	Schwerlastrolle 100	Stahl
7	4	Verbundmuffe M8x15	Edelstahl AISI 202
8	4	DIN 125 8.4	Edelstahl AISI 202
9	4	DIN 633 M8x20	Edelstahl AISI 202
10	1	Ecke unten v17(Spiegeln)	Kiefer
11	2	Spax 5x60 0191010500603	Stahl
12	1	Schwerlastrolle 100 v1(Spiegeln)	Stahl
13	4	Verbundmuffe M8x15 v3(Spiegeln)	Edelstahl AISI 202
14	4	DIN 125 8.4	Edelstahl AISI 202
15	4	DIN 633 M8x20	Edelstahl AISI 202
16	1	Ecke unten v17(Spiegeln) (1)	Kiefer
17	2	Spax 5x60 0191010500603	Stahl
18	1	Schwerlastrolle 100 v1(Spiegeln) (1)	Stahl
19	4	Verbundmuffe M8x15 v3(Spiegeln) (1)	Edelstahl AISI 202
20	4	DIN 125 8.4	Edelstahl AISI 202
21	4	DIN 633 M8x20	Edelstahl AISI 202
22	1	Ecke unten v17(Spiegeln)(Spiegeln)	Kiefer
23	2	Spax 5x60 0191010500603	Stahl
24	1	Schwerlastrolle 100 v1(Spiegeln)(Spiegeln)	Stahl
25	4	Verbundmuffe M8x15 v3(Spiegeln)(Spiegeln)	Edelstahl AISI 202
26	4	DIN 125 8.4	Edelstahl AISI 202
27	4	DIN 633 M8x20	Edelstahl AISI 202

Dept.	Technical reference	Created by Knut Welzel 17.01.2024	Approved by
		Document type	Document status
		Title **Standardtisch Rahmen unten**	DWG No.
			Rev. / Date of issue / Sheet 2

Teileliste				
Element	Anz.	Bauteilnummer	Beschreibung	Material
1	2	Bein	812x54x54; 14612119	Kiefer
2	1	Seitenplatte links	800x250x18; 23141003; 1St; 800x300x18; 23141012; 1St	Kiefer
3	5	TSS4613SC-400	B09J18JV1P	Stahl
4	15	Stahlia B0C7ZJ6NY1	B0C7ZJ6NY1	Stahl

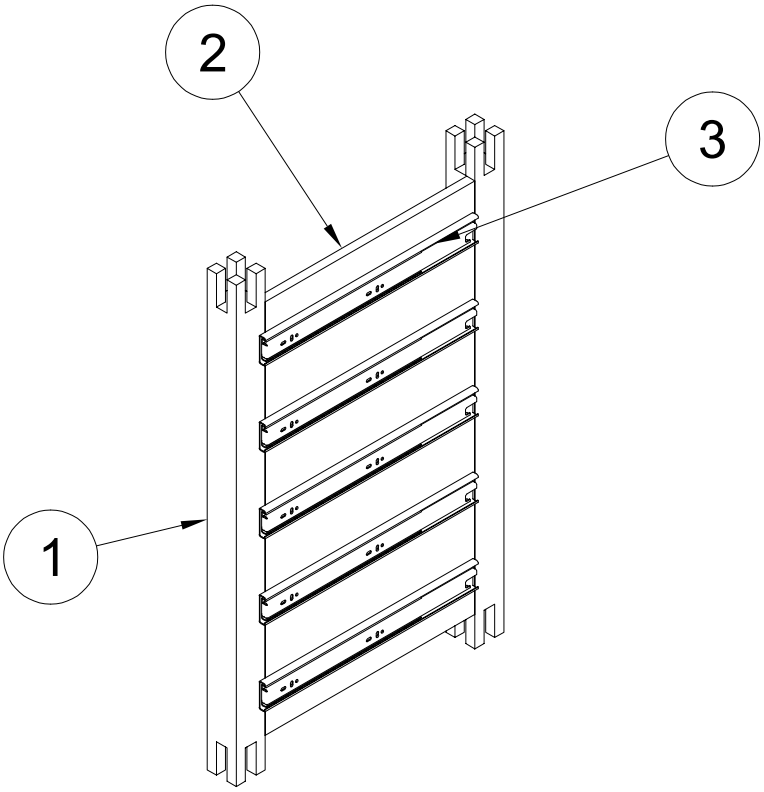

Dept.	Technical reference	Created by Knut Welzel 17.01.2024	Approved by	
		Document type	Document status	
		Title **Standardtisch Beine links**	DWG No.	
			Rev. / Date of issue	Sheet 3

Teileliste				
Element	Anz.	Bauteilnummer	Beschreibung	Material
1	2	Bein	812x54x54; 14612119	Kiefer
2	1	Seitenplatte rechts	800x250x18; 23141003; 1St; 800x300x18; 23141012; 1St	Kiefer
3	5	TSS4613SC-400	B09J18JV1P	Stahl
4	15	Stahlia B0C7ZJ6NY1	B0C7ZJ6NY1	Stahl

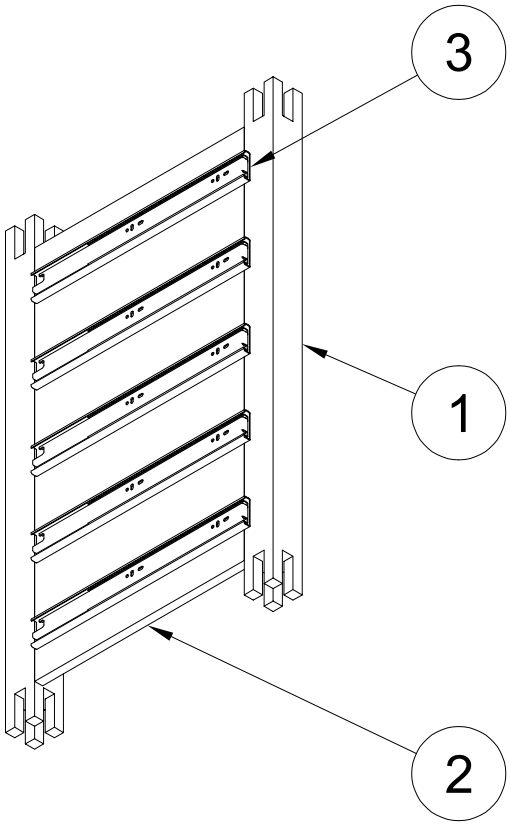

Dept.	Technical reference	Created by Knut Welzel 17.01.2024	Approved by	
		Document type	Document status	
		Title **Standardtisch Beine rechts**	DWG No.	
			Rev. / Date of issue	Sheet 4

Teileliste		
Element	Anz.	Bauteilnummer
1	1	Standardtisch Beine links
2	1	Standardtisch Beine rechts
3	1	Standardtisch Rahmen unten
4	1	Standardtisch Rahmen oben

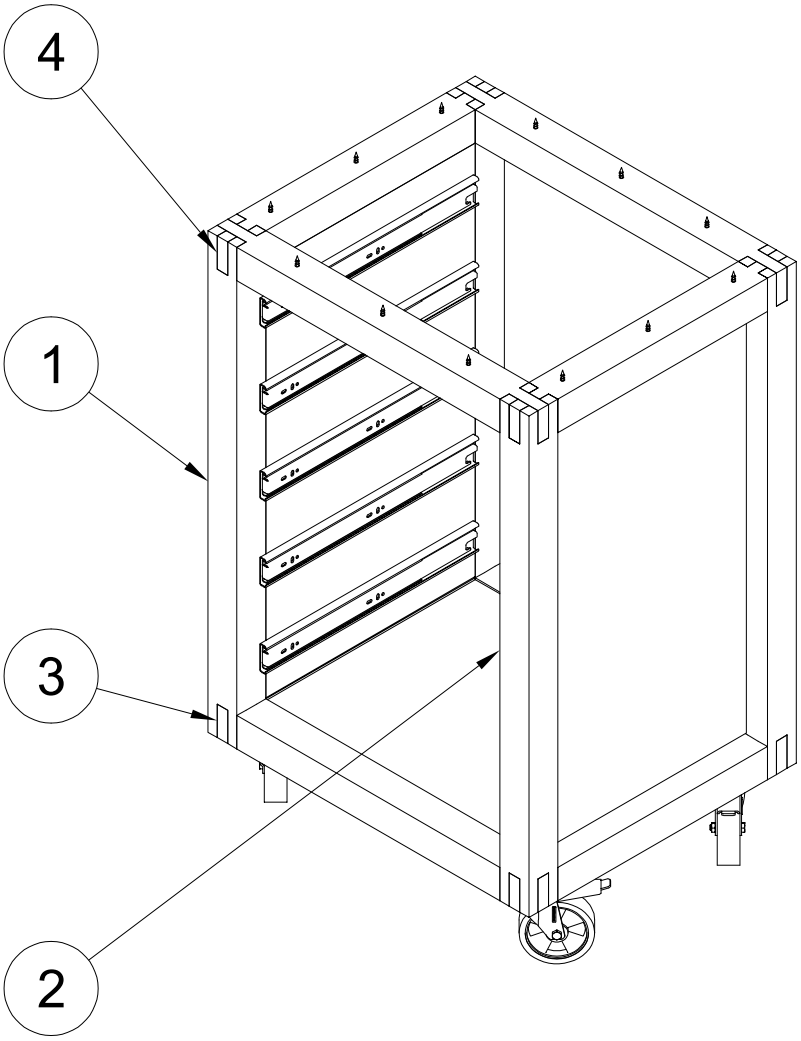

Dept.	Technical reference	Created by Knut Welzel 17.01.2024	Approved by	
		Document type	Document status	
		Title Standardtisch Beine	DWG No.	
			Rev. / Date of issue	Sheet 5

Teileliste				
Element	Anz.	Bauteilnummer	Beschreibung	Material
1	2	Rahmen vorn oben	600x54x54; 14612119	Kiefer
2	2	Rahmen seite oben	564x54x54; 14612119	Kiefer
3	12	Spax 6x70 0191010600703	B00MPIBYAU	Stahl

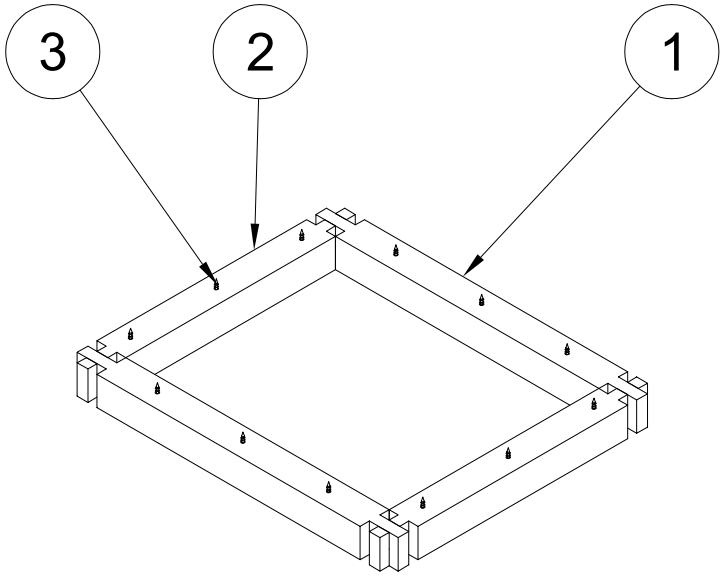

Dept.	Technical reference	Created by	Approved by
		Knut Welzel 17.01.2024	
		Document type	Document status
		Title: Standardtisch Rahmen oben	DWG No.
			Rev. / Date of issue / Sheet 6

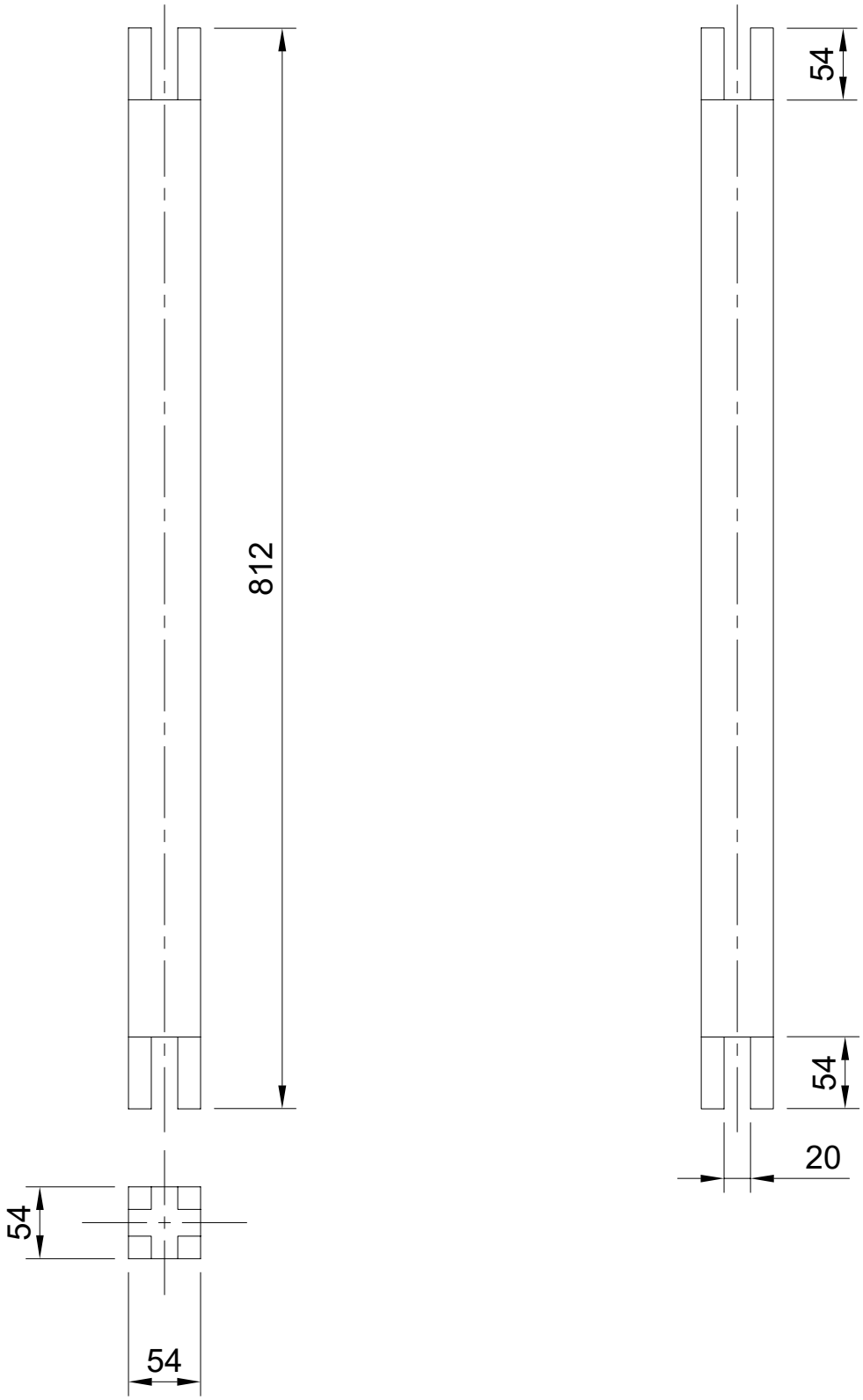

Dept.	Technical reference	Created by Knut Welzel 16.01.2024	Approved by		
		Document type	Document status		
		Title Bein	DWG No.		
			Rev.	Date of issue	Sheet 10

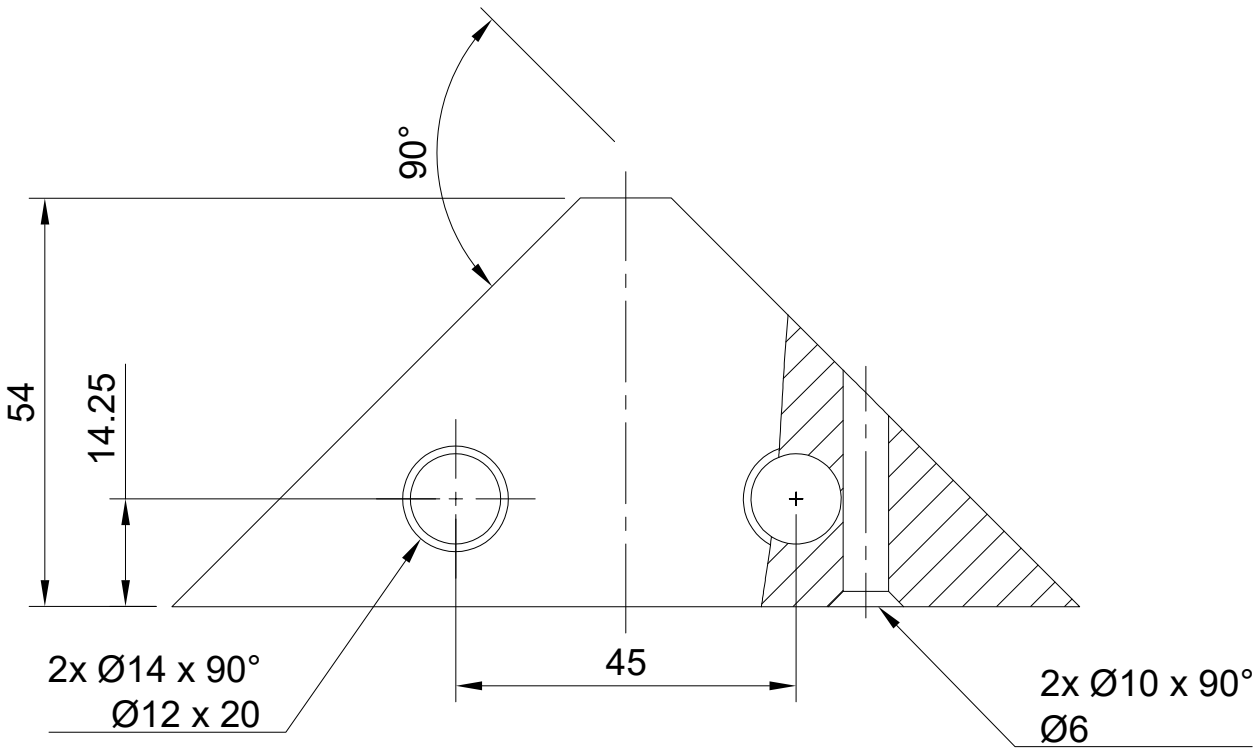

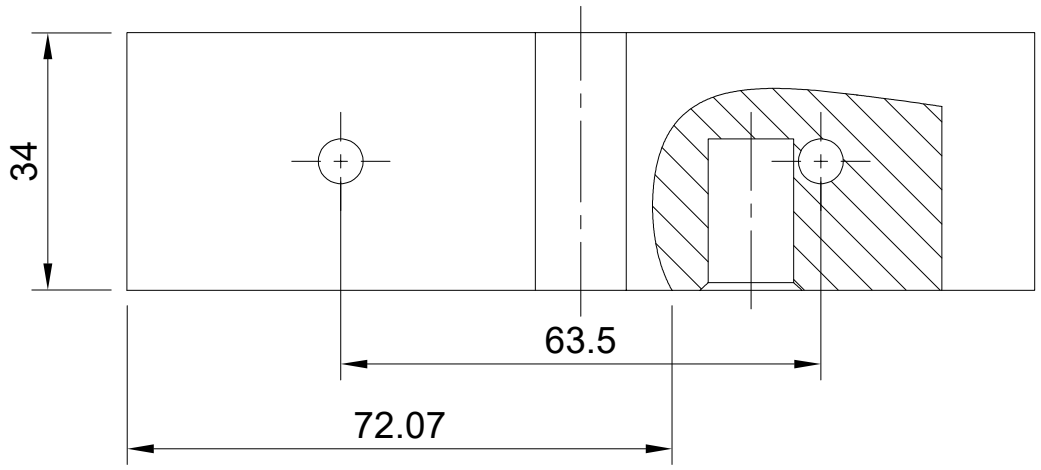

Dept.	Technical reference	Created by Knut Welzel 16.01.2024	Approved by		
		Document type	Document status		
		Title Ecke unten	DWG No.		
			Rev.	Date of issue	Sheet 11

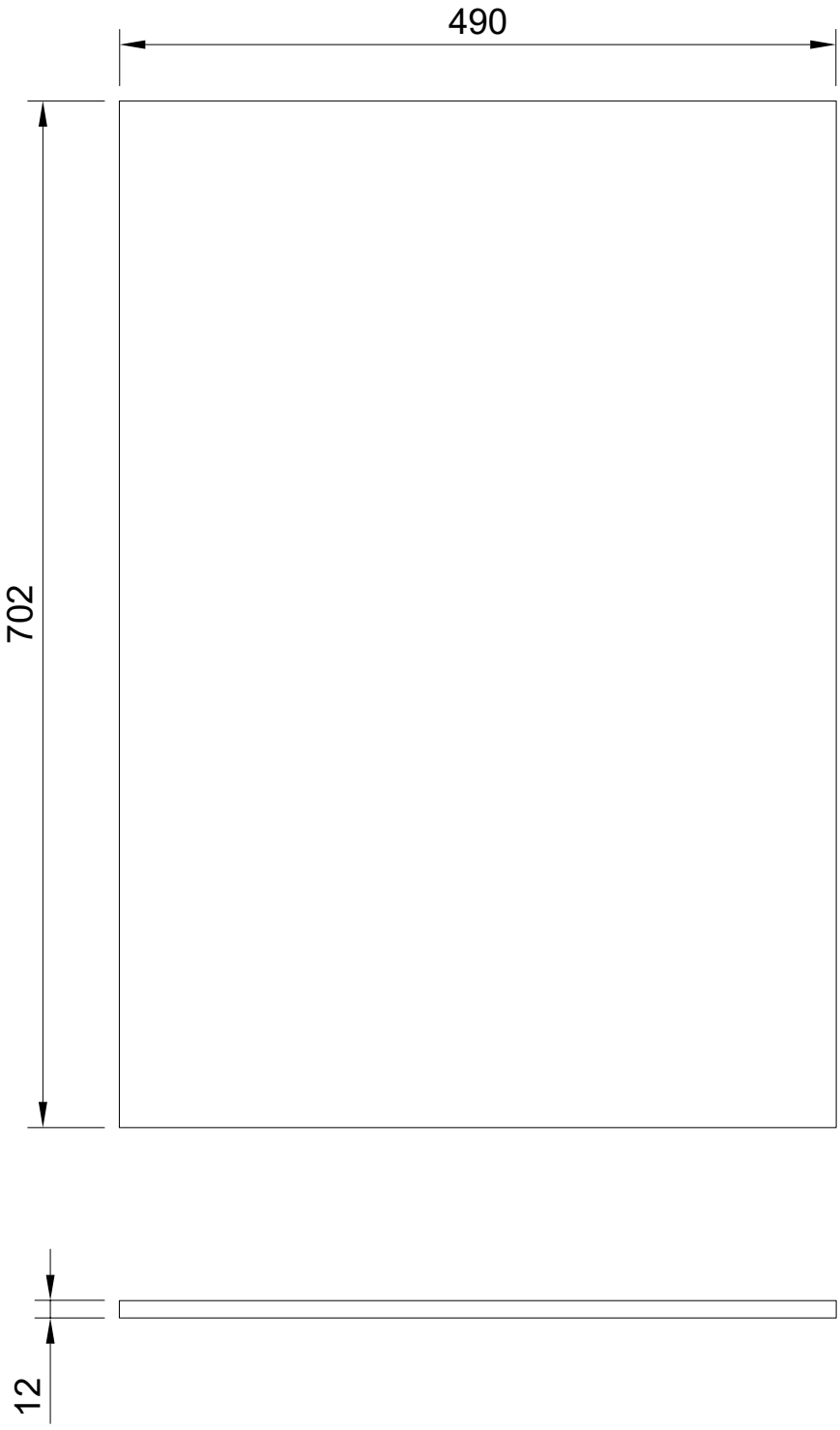

Dept.	Technical reference	Created by Knut Welzel 16.01.2024	Approved by
		Document type	Document status
		Title Rückplatteplatte	DWG No.
			Rev. / Date of issue / Sheet 12

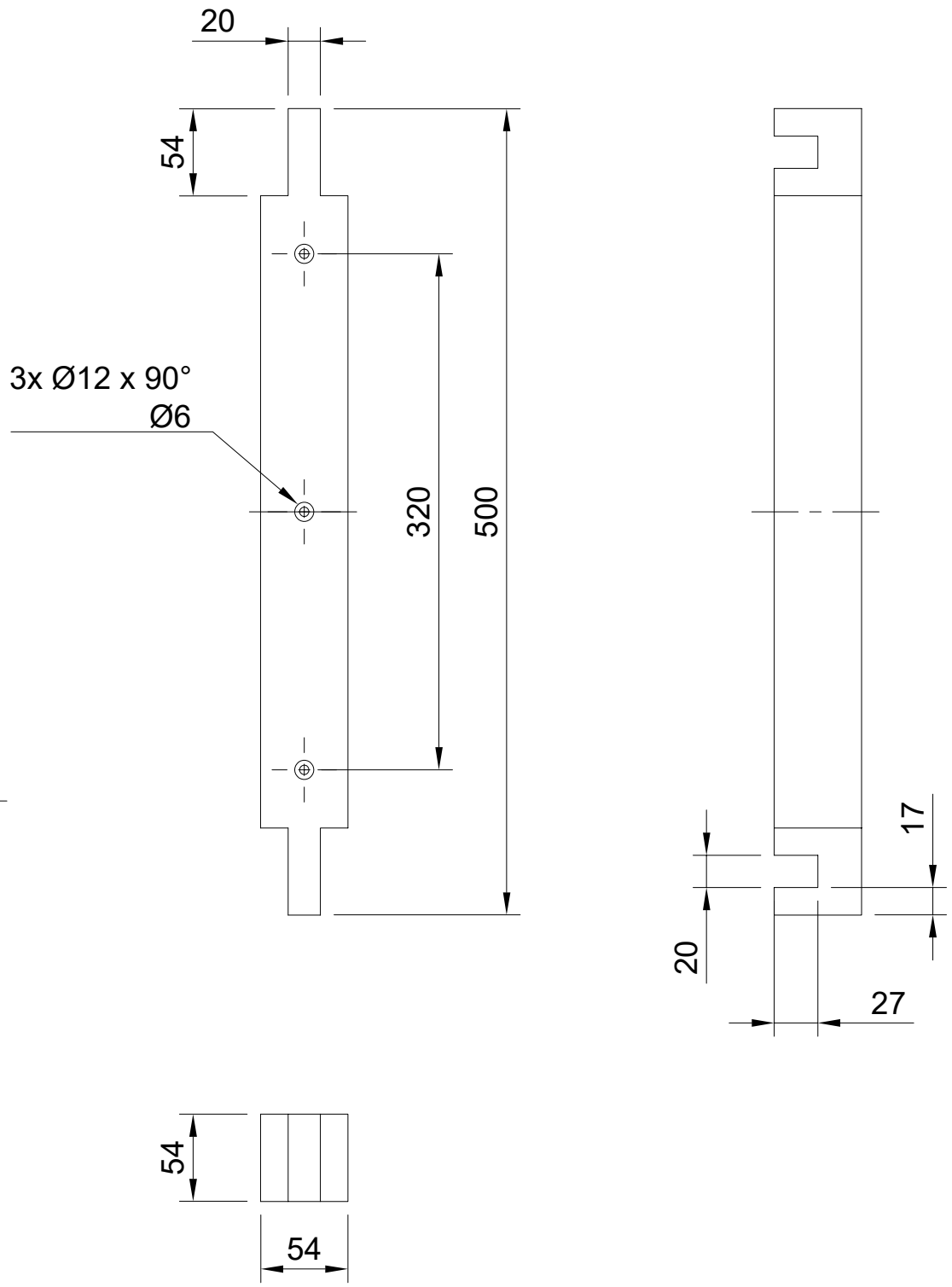

Dept.	Technical reference	Created by Knut Welzel 16.01.2024	Approved by	
		Document type	Document status	
		Title **Rahmen seite oben**	DWG No.	
			Rev. / Date of issue	Sheet 13

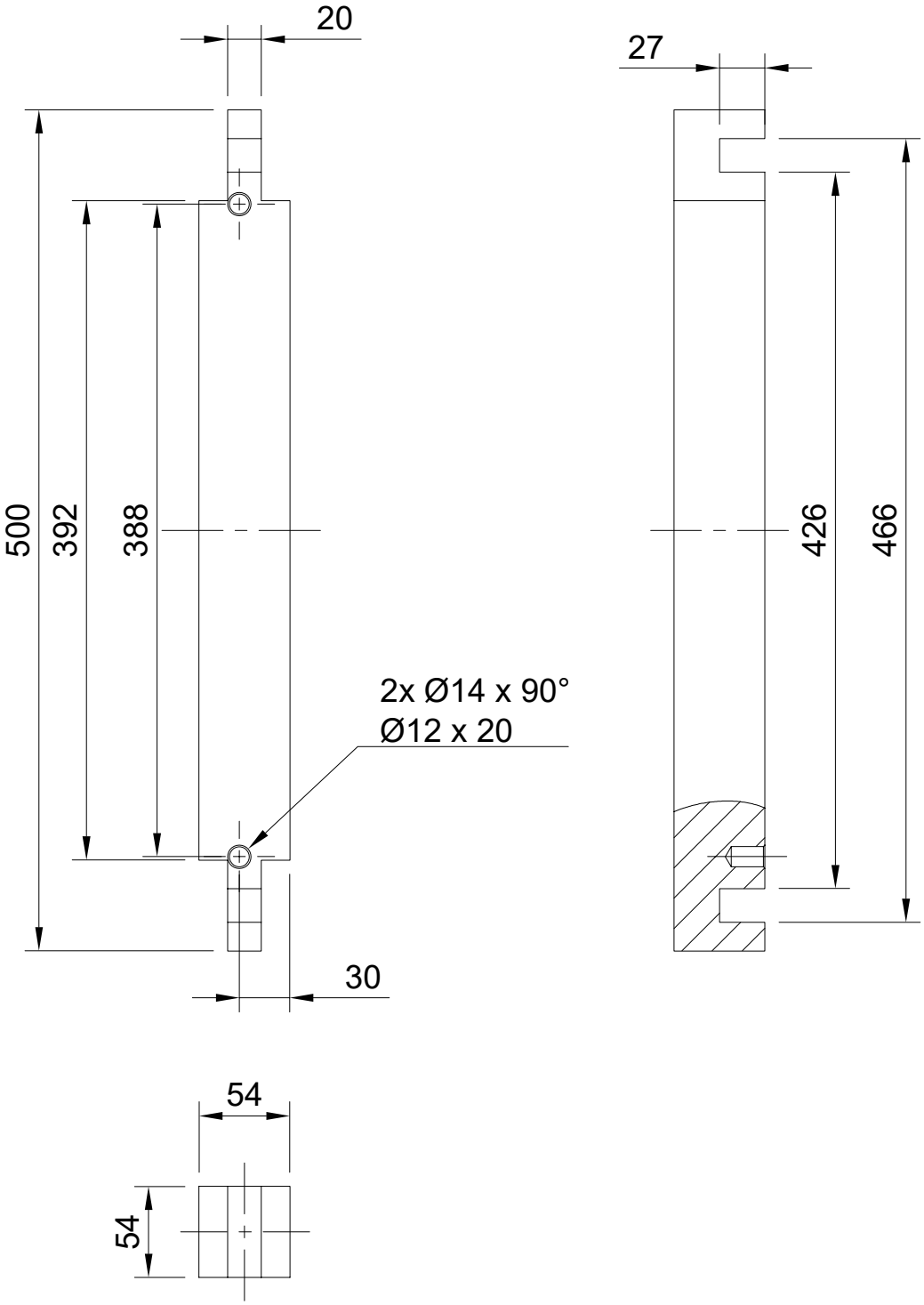

Dept.	Technical reference	Created by Knut Welzel 16.01.2024	Approved by	
		Document type	Document status	
		Title **Rahmen seite unten**	DWG No.	
			Rev. / Date of issue	Sheet 14

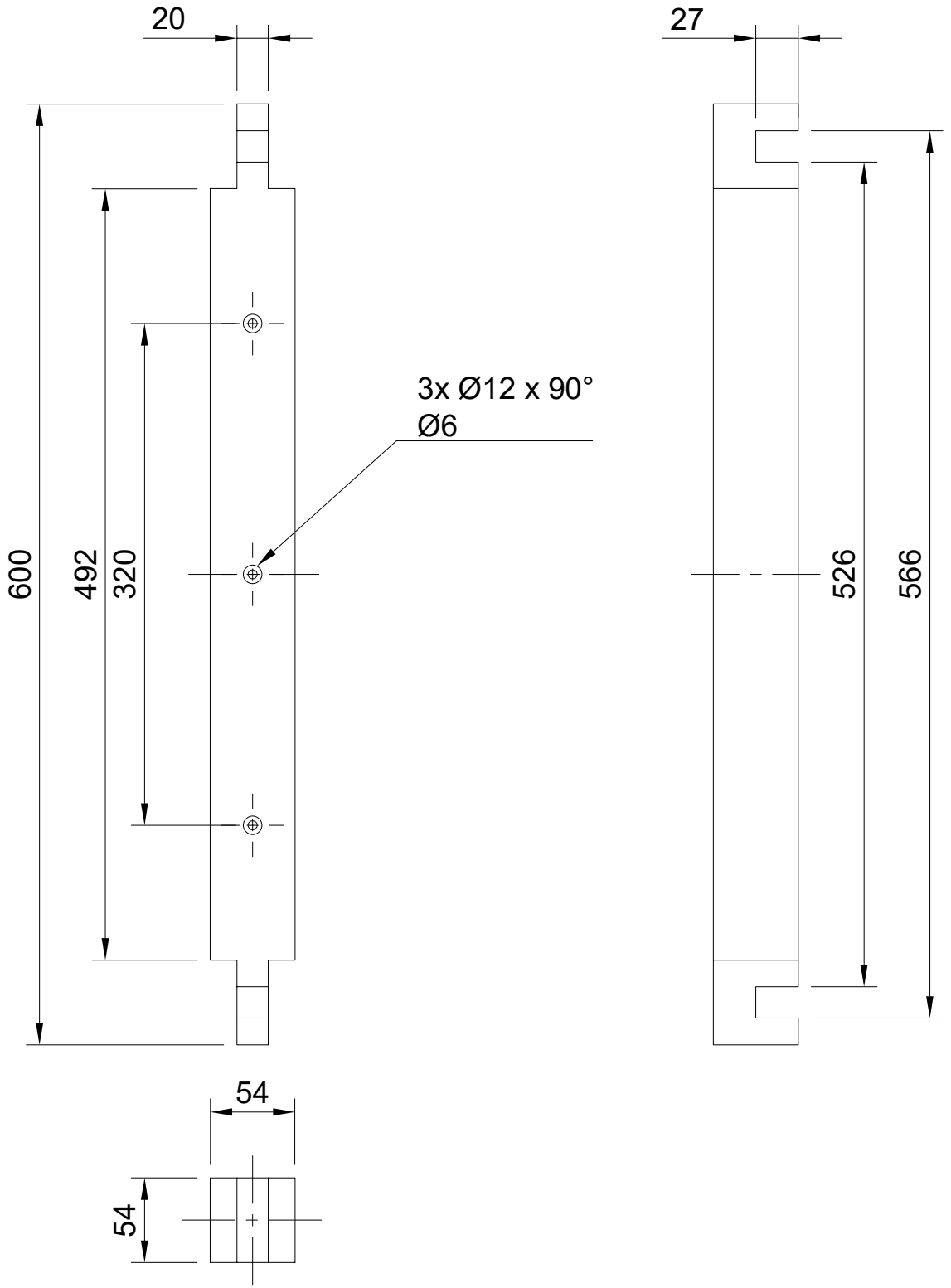

Dept.	Technical reference	Created by Knut Welzel 16.01.2024	Approved by
		Document type	Document status
		Title Rahmen vorn oben	DWG No.
			Rev. / Date of issue / Sheet 15

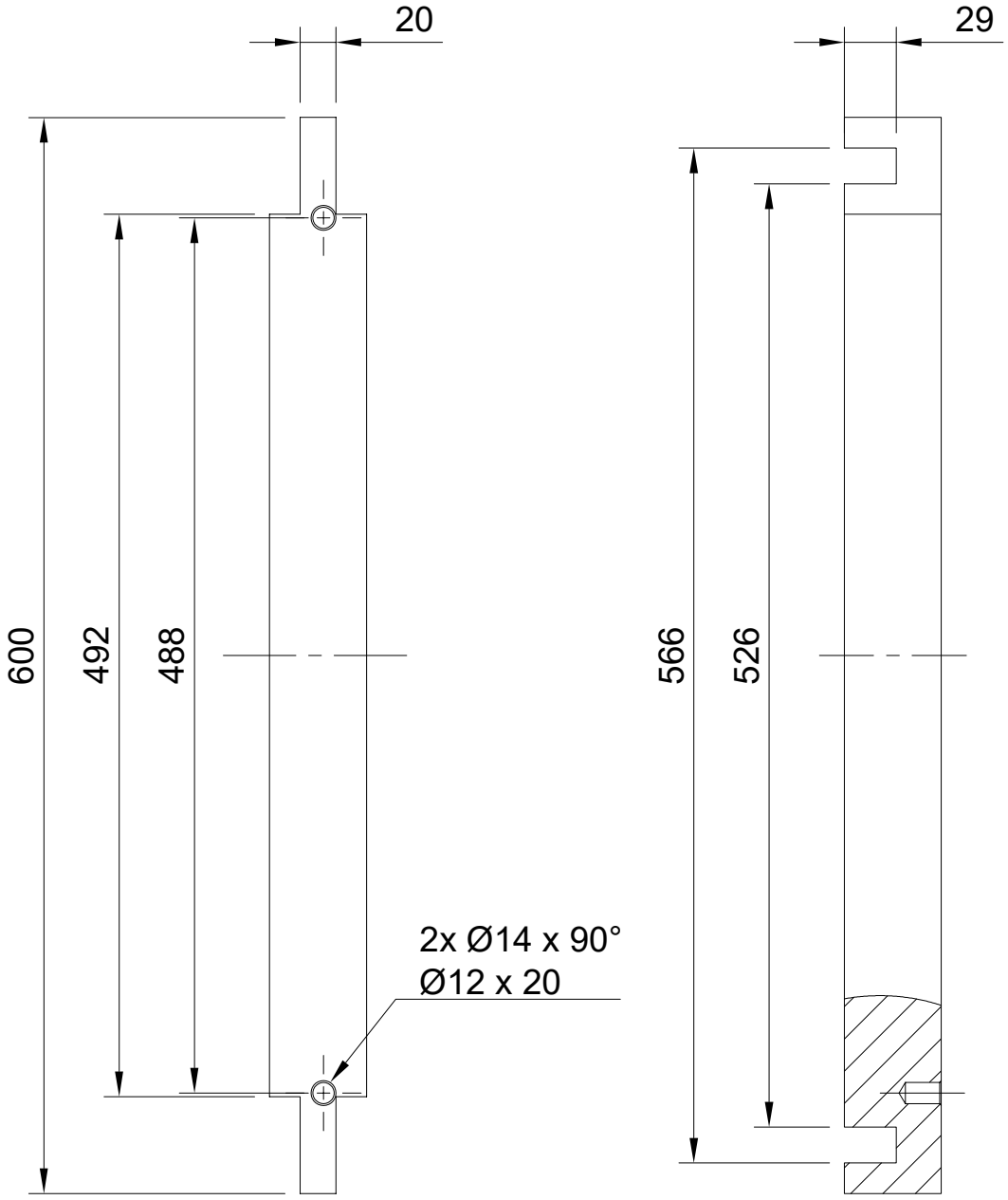

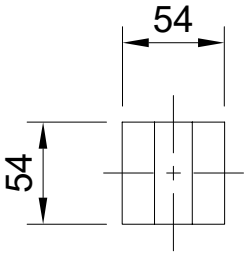

Dept.	Technical reference	Created by Knut Welzel 16.01.2024	Approved by	
		Document type	Document status	
		Title **Rahmen vorn unten**	DWG No.	
			Rev. / Date of issue	Sheet 16

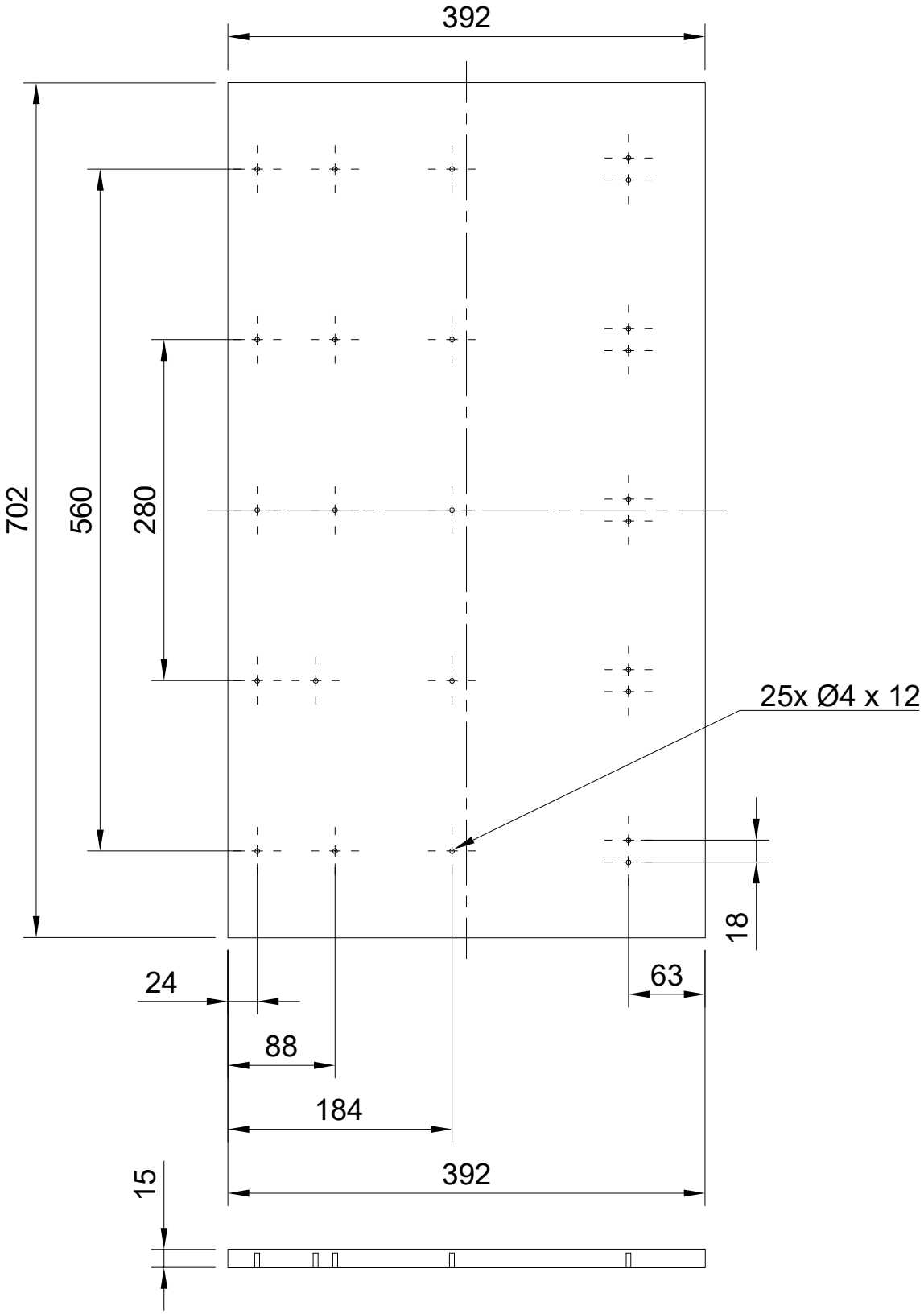

Dept.	Technical reference	Created by Knut Welzel 17.01.2024	Approved by	
		Document type	Document status	
		Title Seitenplatte links	DWG No.	
			Rev. / Date of issue	Sheet 17

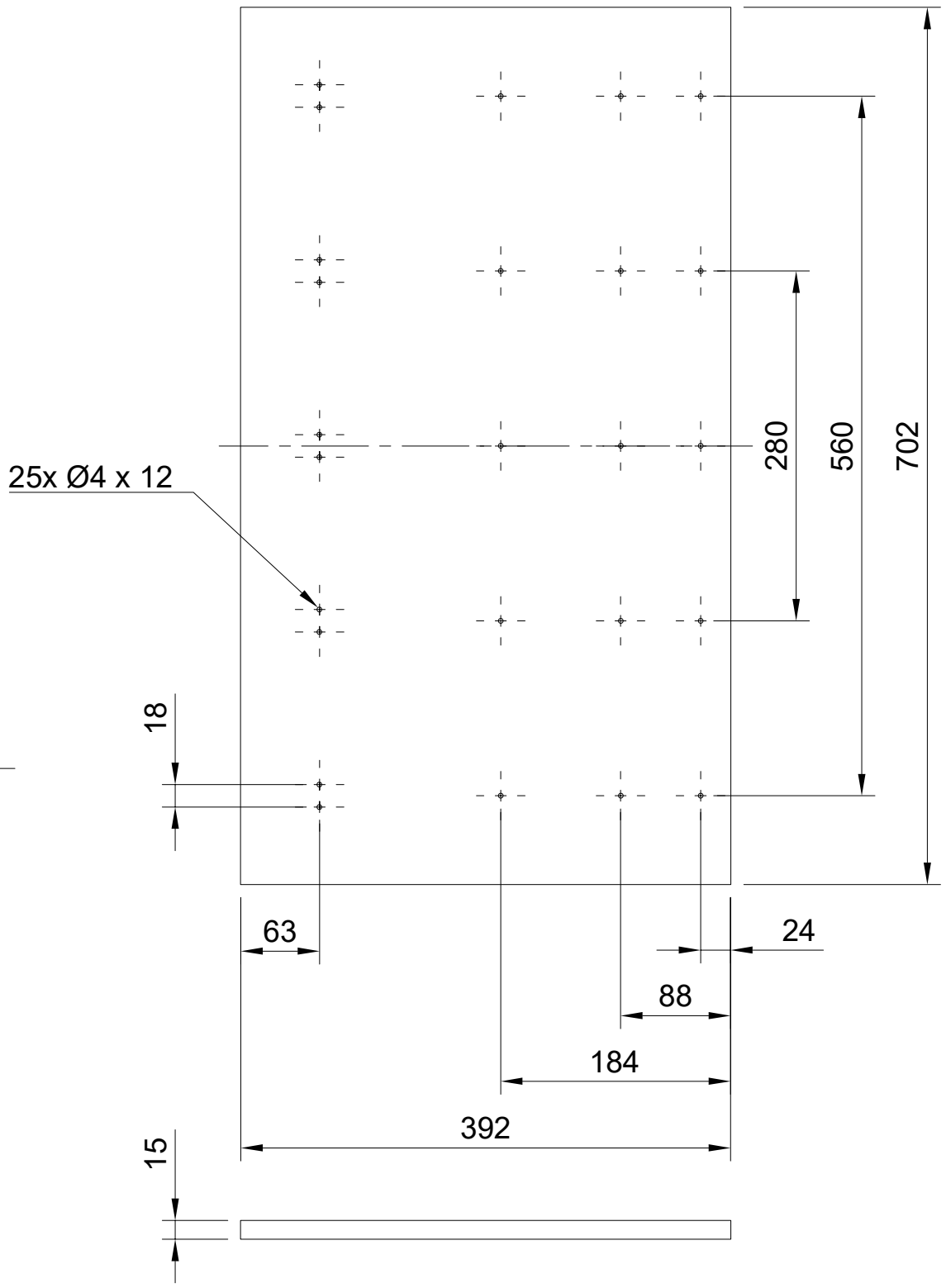

Dept.	Technical reference	Created by Knut Welzel 17.01.2024	Approved by
		Document type	Document status
		Title Seitenplatte rechts	DWG No.
			Rev. / Date of issue / Sheet 18

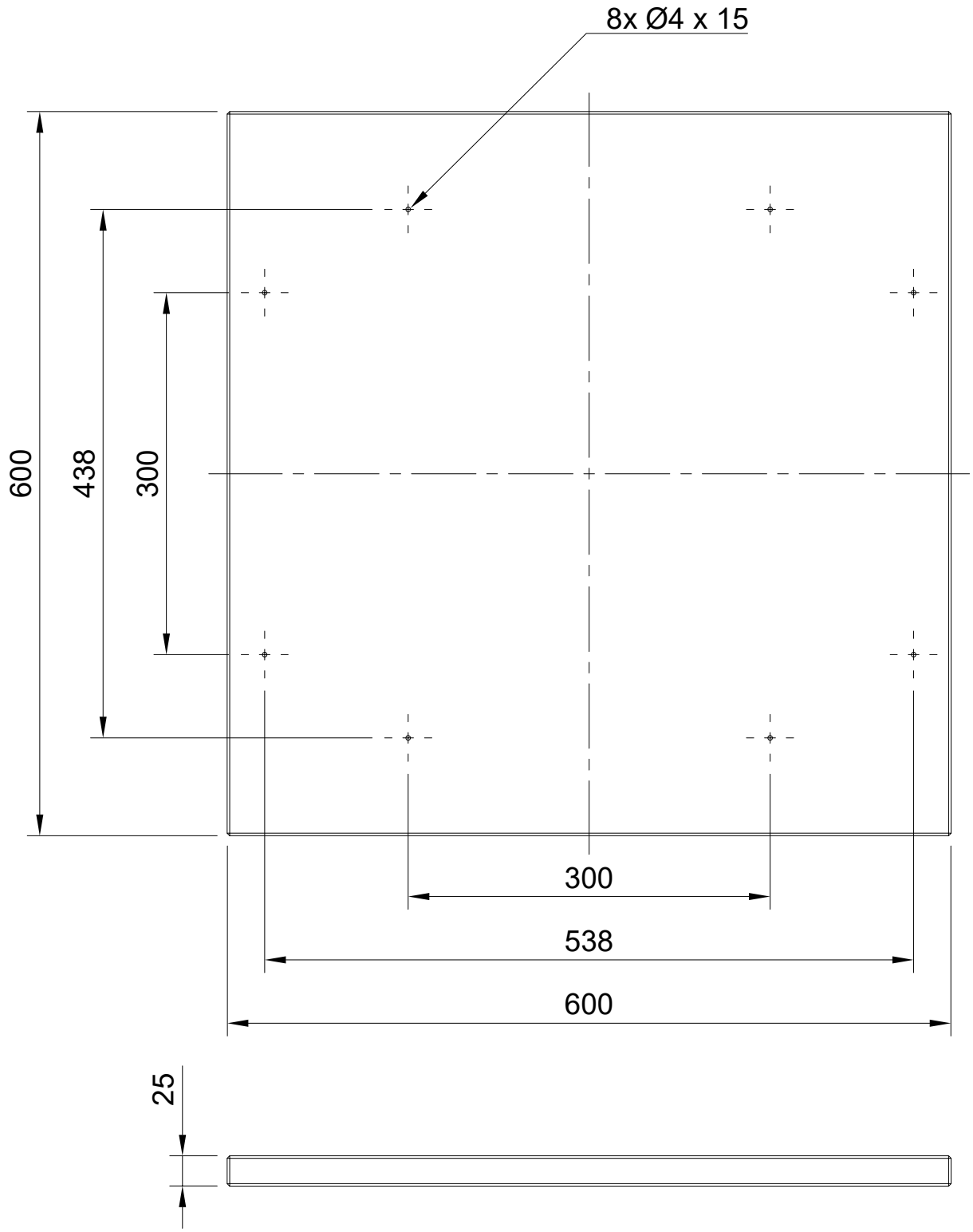

Dept.	Technical reference	Created by Knut Welzel 17.01.2024	Approved by	
		Document type	Document status	
		Title Tischplatte	DWG No.	
			Rev. / Date of issue	Sheet 19

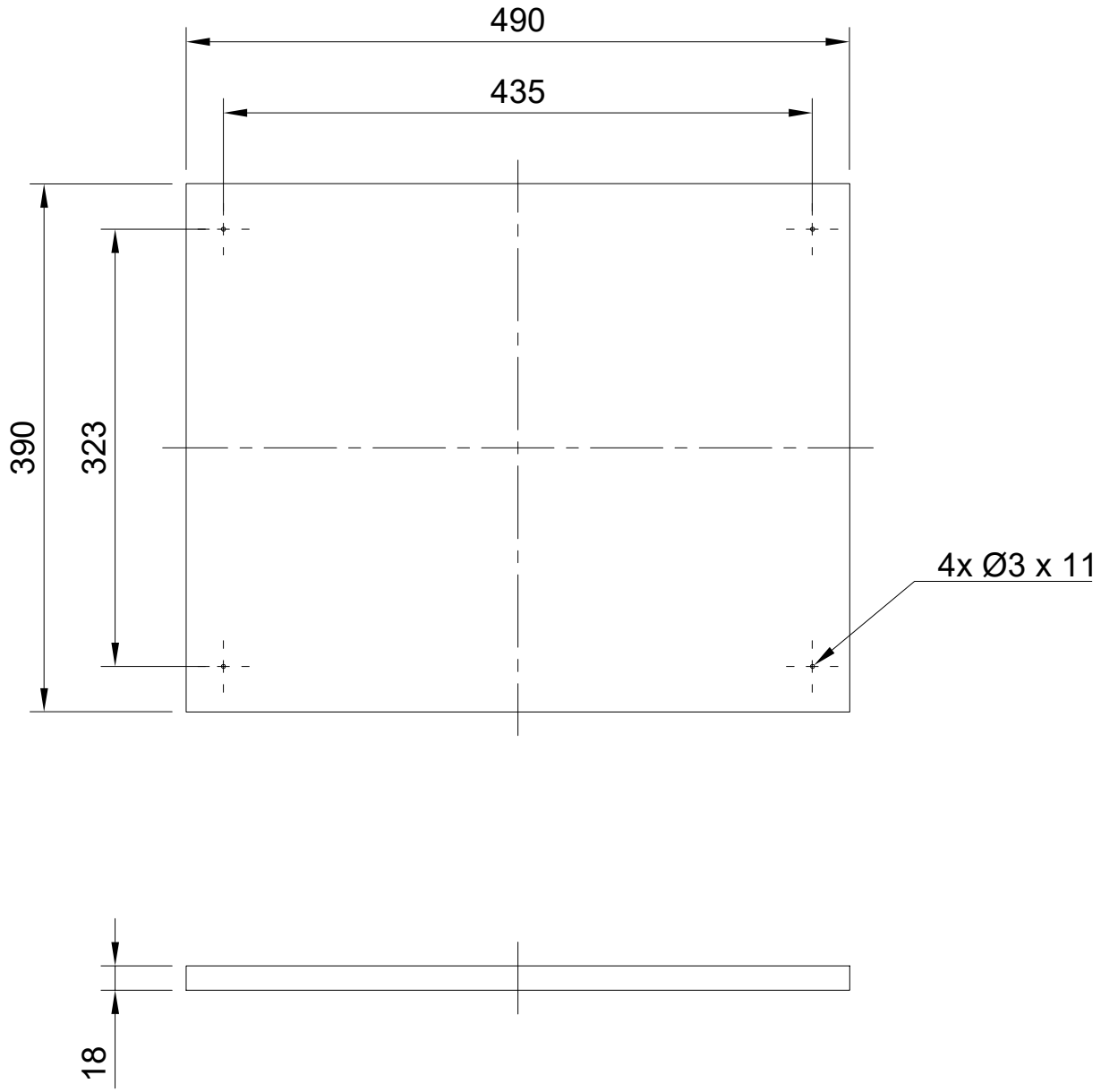

Dept.	Technical reference	Created by Knut Welzel 16.01.2024	Approved by
		Document type	Document status
		Title Bodenplatte	DWG No.
			Rev. / Date of issue / Sheet 1/1

Teileliste				
Element	Anz.	Bauteilnummer	Beschreibung	Material
1	1	Schublade Front	486x200x18; 23141076; 1/4St	Kiefer
2	1	Schublade Seite links	482x200x18; 23141076; 1/4St	Kiefer
3	1	Schublade Seite rechts	482x200x18; 23141076; 1/4St	Kiefer
4	1	Schublade Rückteil	454x200x18; 23141076; 1/4St	Kiefer
5	1	Schublade Boden	435x500x4; 26015639; 1/2St	Holz
6	1	Muschelgriff	B07S448LZ2	Stahl
7	8	Lamello 0	B017HLCWJQ	Holz

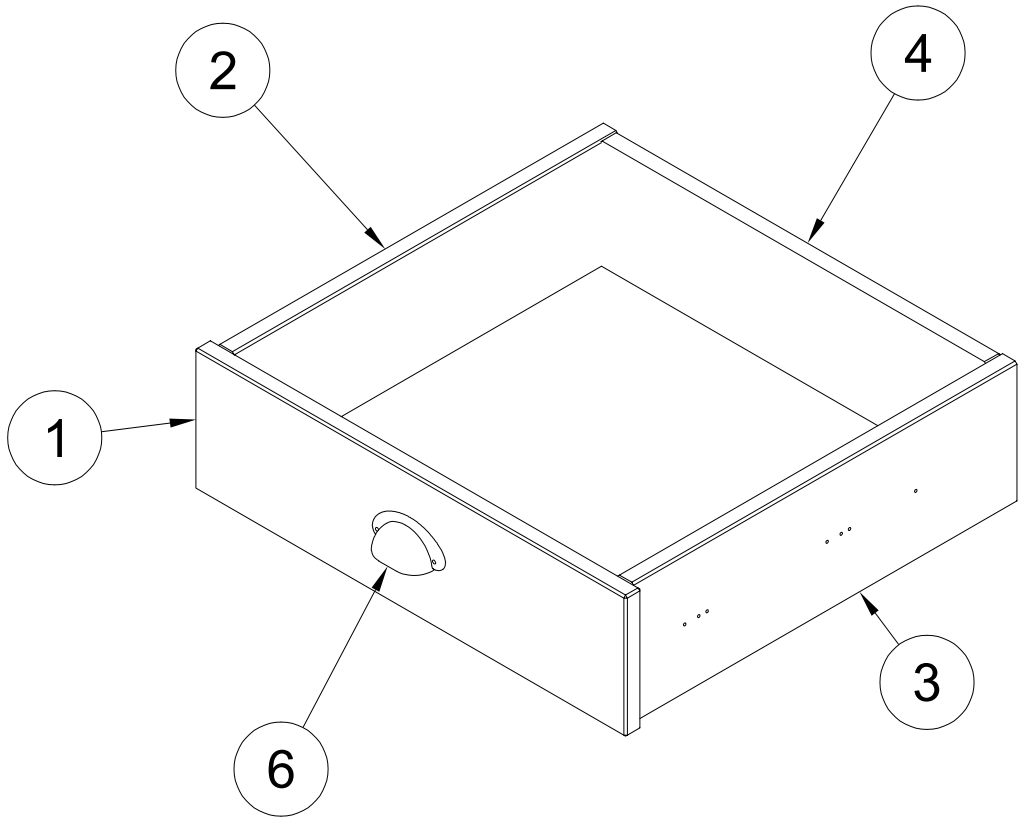

Dept.	Technical reference	Created by	Approved by
		Knut Welzel 17.01.2024	
		Document type	Document status
		Title Schublade	DWG No.
			Rev. / Date of issue / Sheet 30

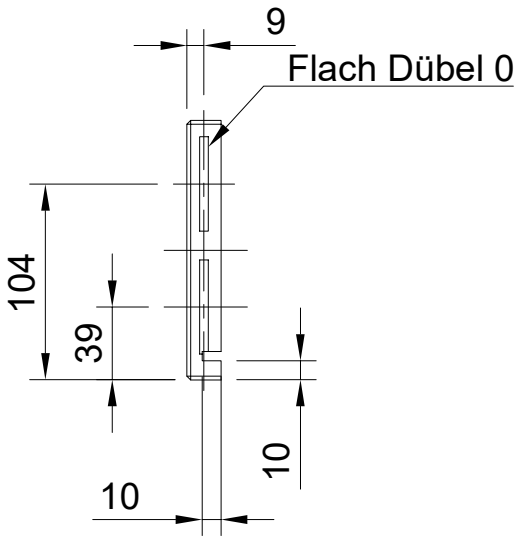

Dept.	Technical reference	Created by Knut Welzel 16.01.2024	Approved by
		Document type	Document status
		Title Schublade Rückteil	DWG No.
			Rev. / Date of issue / Sheet 32

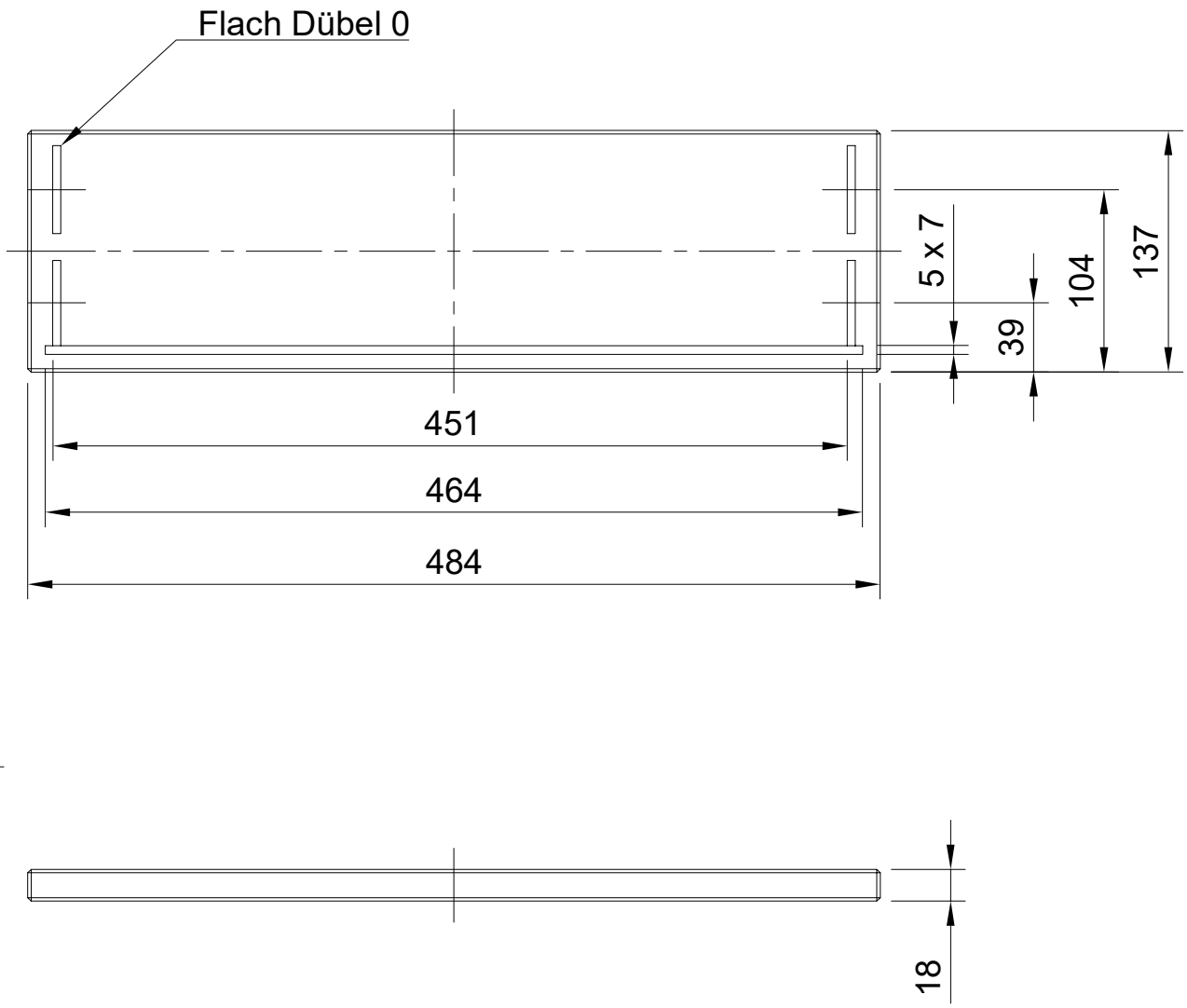

Dept.	Technical reference	Created by Knut Welzel 16.01.2024	Approved by	
		Document type	Document status	
		Title Schublade Front	DWG No.	
			Rev. / Date of issue	Sheet 31

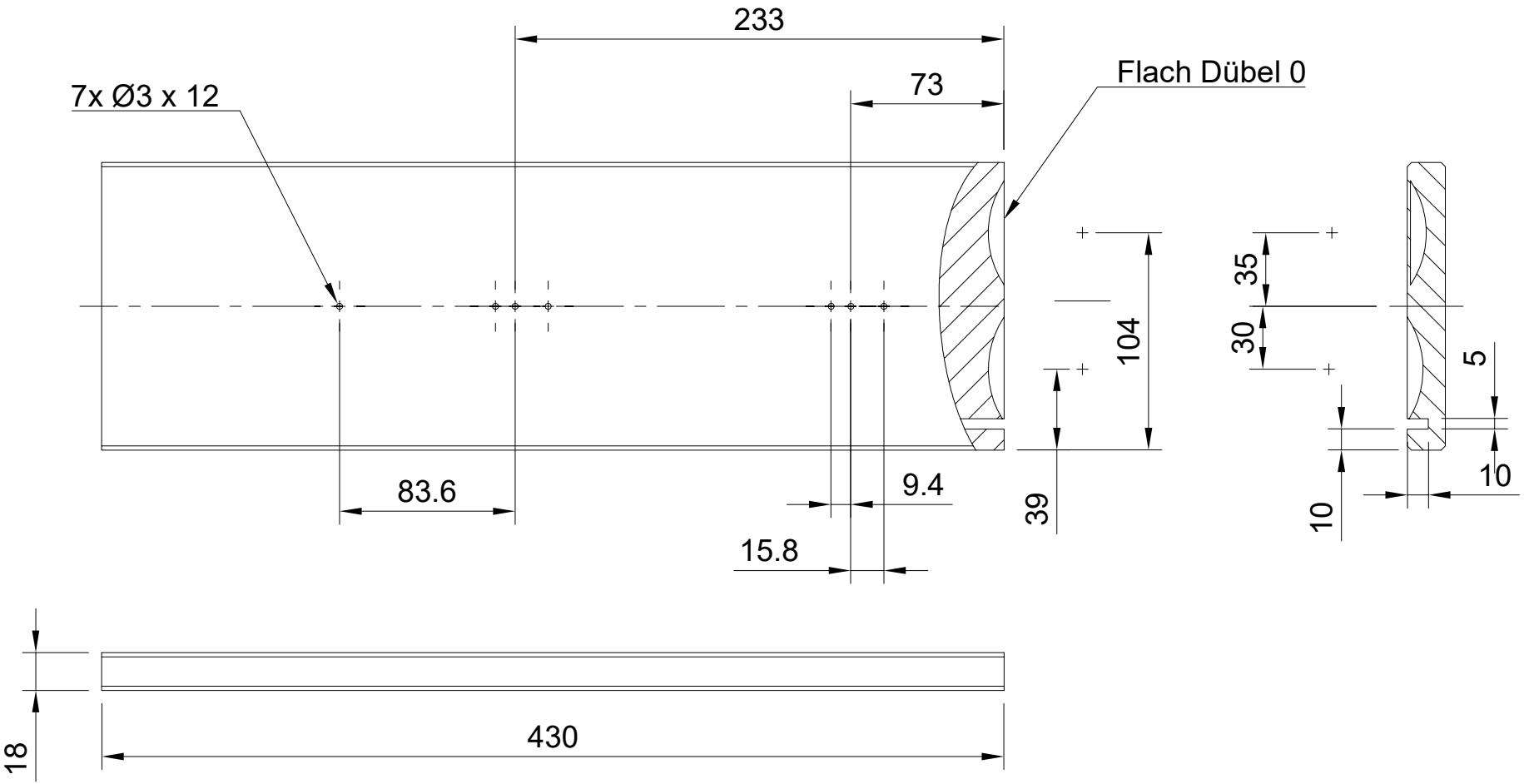

Dept.	Technical reference	Created by Knut Welzel 16.01.2024	Approved by	
		Document type	Document status	
		Title **Schublade Seite links**	DWG No.	
			Rev. / Date of issue	Sheet 33

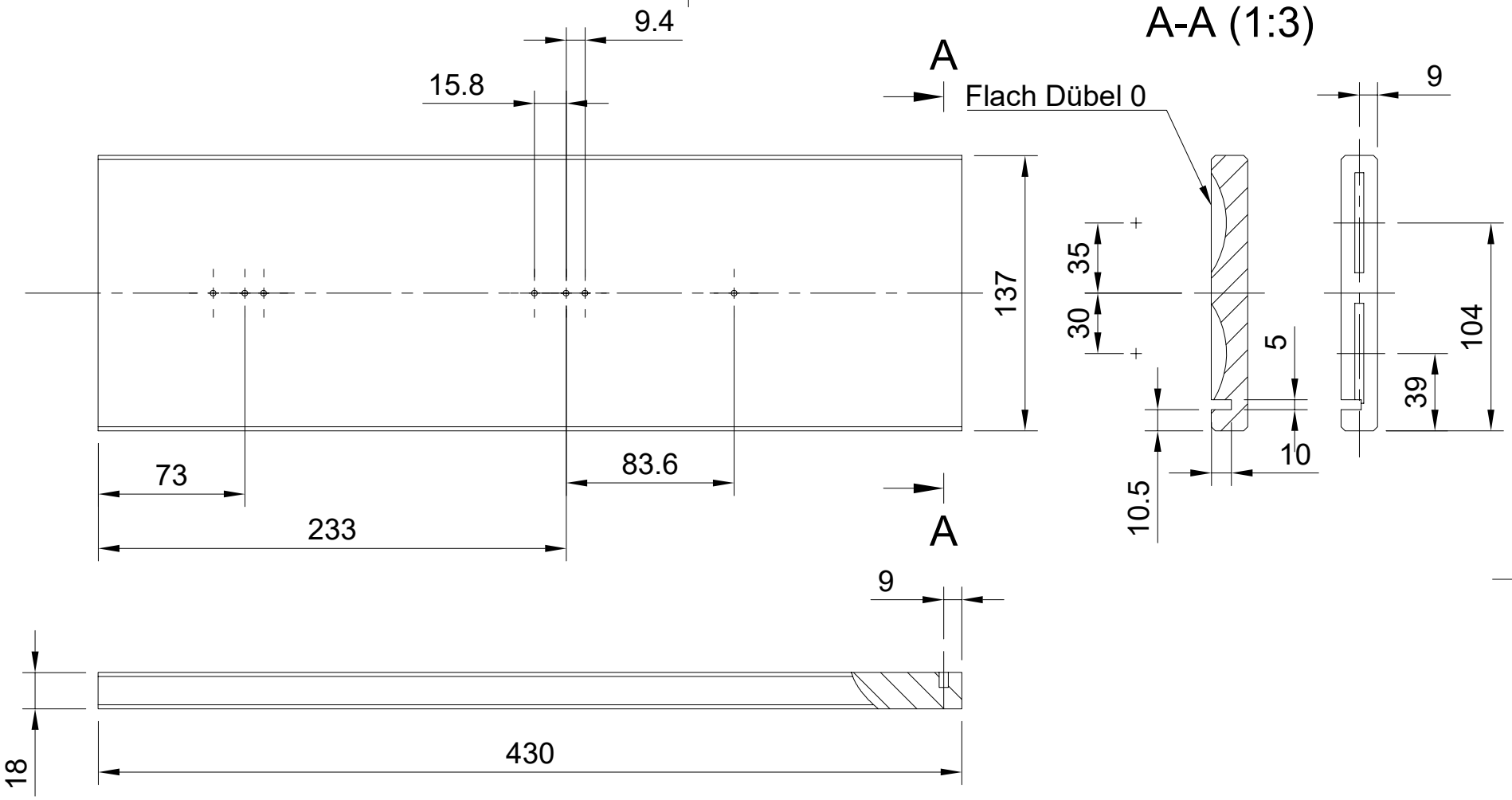

Dept.	Technical reference	Created by Knut Welzel 17.01.2024	Approved by		
		Document type	Document status		
		Title **Schublade Seite rechts**	DWG No.		
			Rev.	Date of issue	Sheet 34

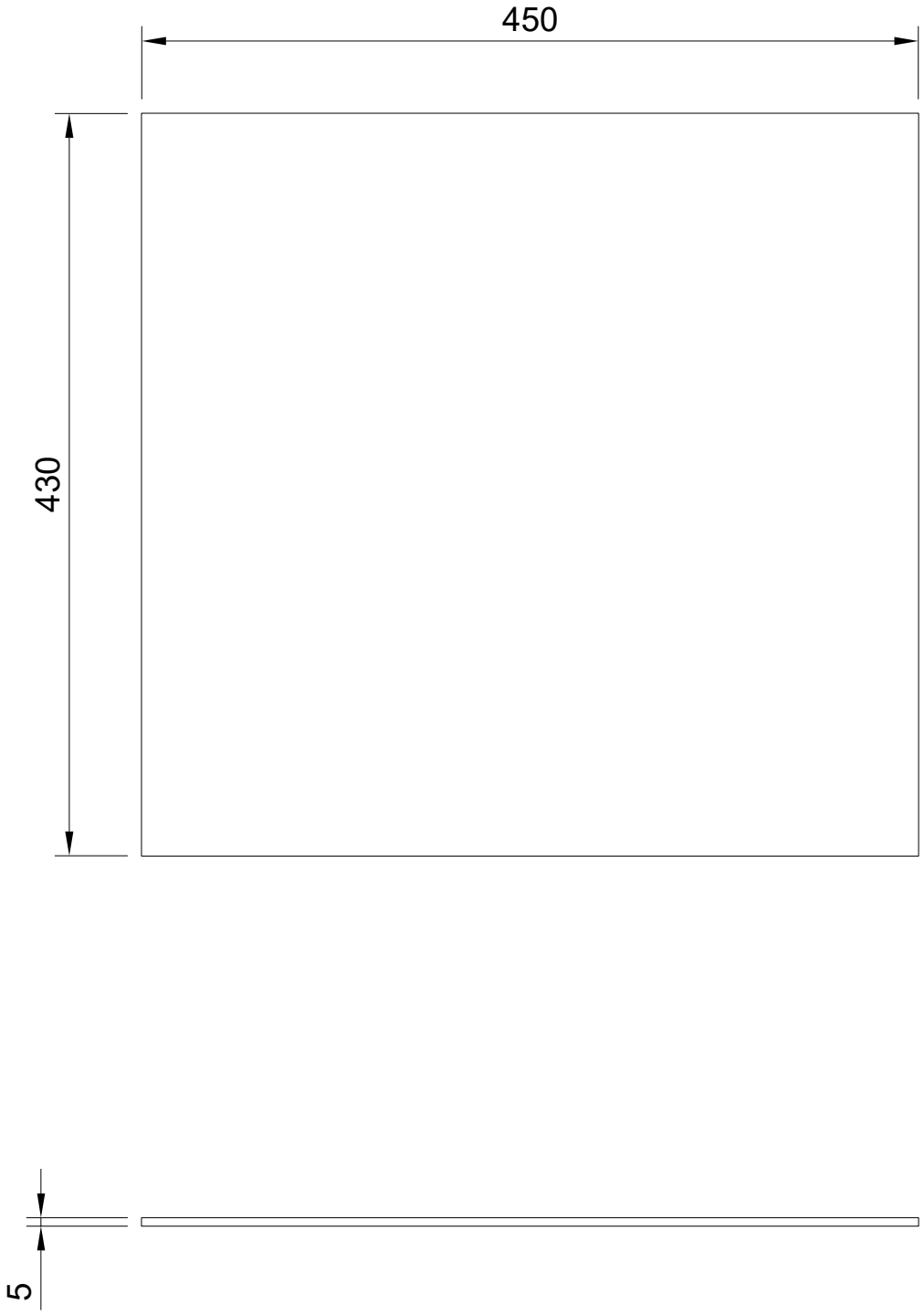

Dept.	Technical reference	Created by Knut Welzel 16.01.2024	Approved by
		Document type	Document status
		Title Schublade Boden	DWG No.
			Rev. / Date of issue / Sheet 35